24.Clearance Light and Illumination Light System

A: WIRING DIAGRAM

1. EXCEPT FOR STI MODEL

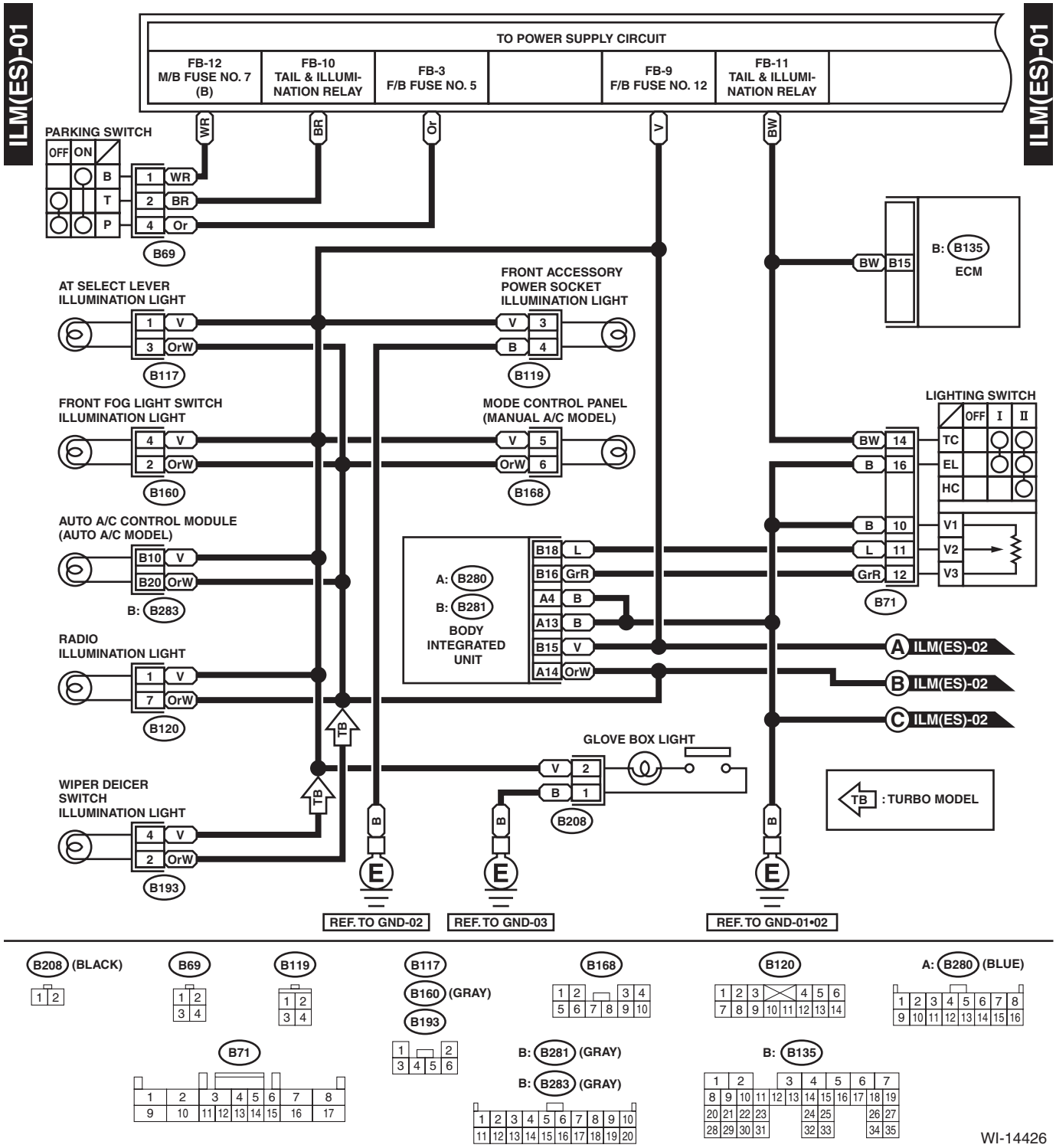

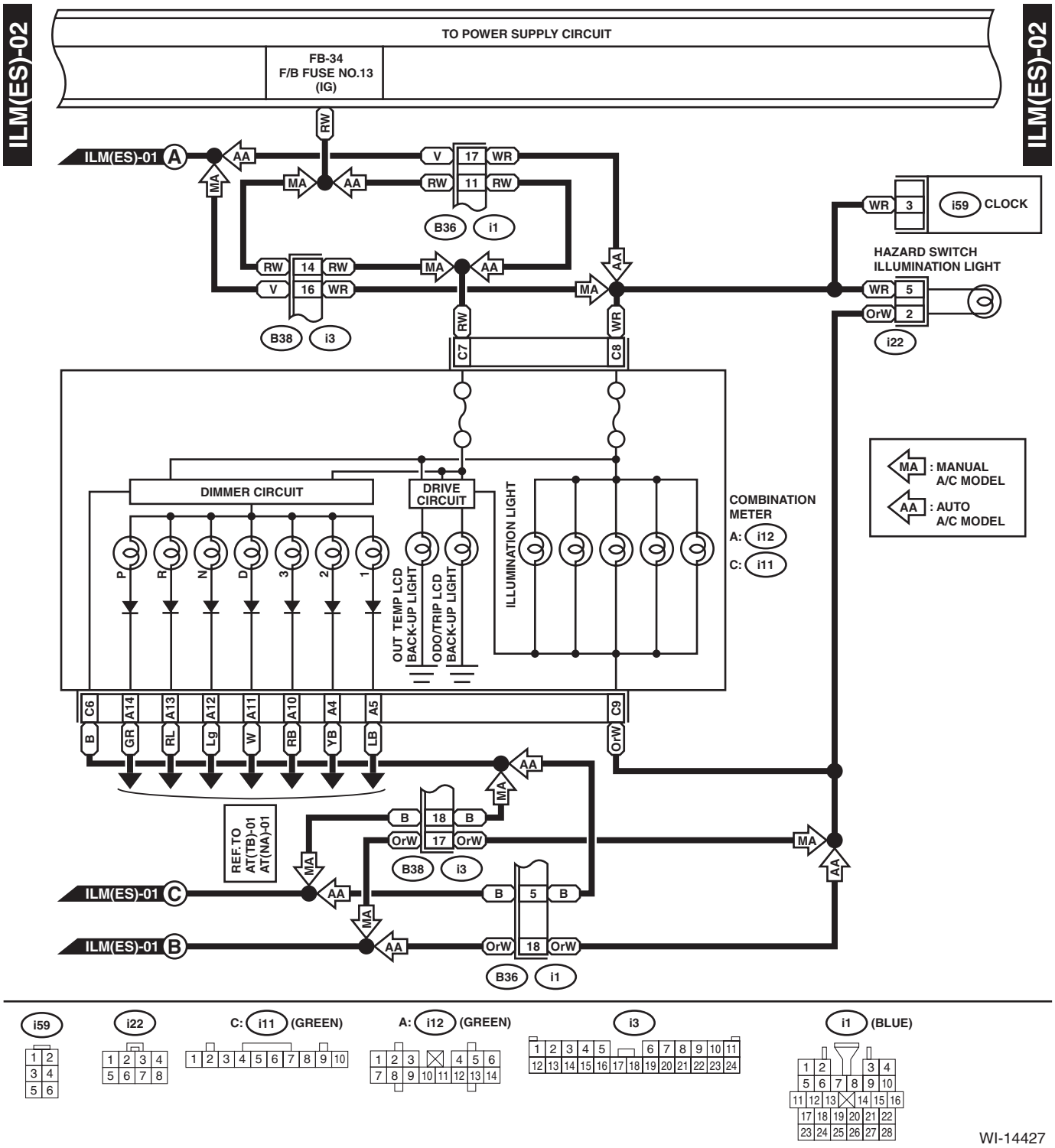
ILM(ES)-02
TO POWER SUPPLY CIRCUIT
FB-34
F/B FUSE NO.13
(IG)
ILM(ES)-01 A
ILM(ES)-01 C
ILM(ES)-01 B
B36
i1
B38
i3
C7
C8
i59
CLOCK
HAZARD SWITCH
ILLUMINATION LIGHT
i22
DIMMER CIRCUIT
DRIVE CIRCUIT
ILLUMINATION LIGHT
OUT TEMP LCD BACK-UP LIGHT
ODO/TRIP LCD BACK-UP LIGHT
COMBINATION METER
A: i12
C: i11
MA : MANUAL A/C MODEL
AA : AUTO A/C MODEL
REF.TO AT(TB)-01 AT(NA)-01
C6
C9
WI-14427

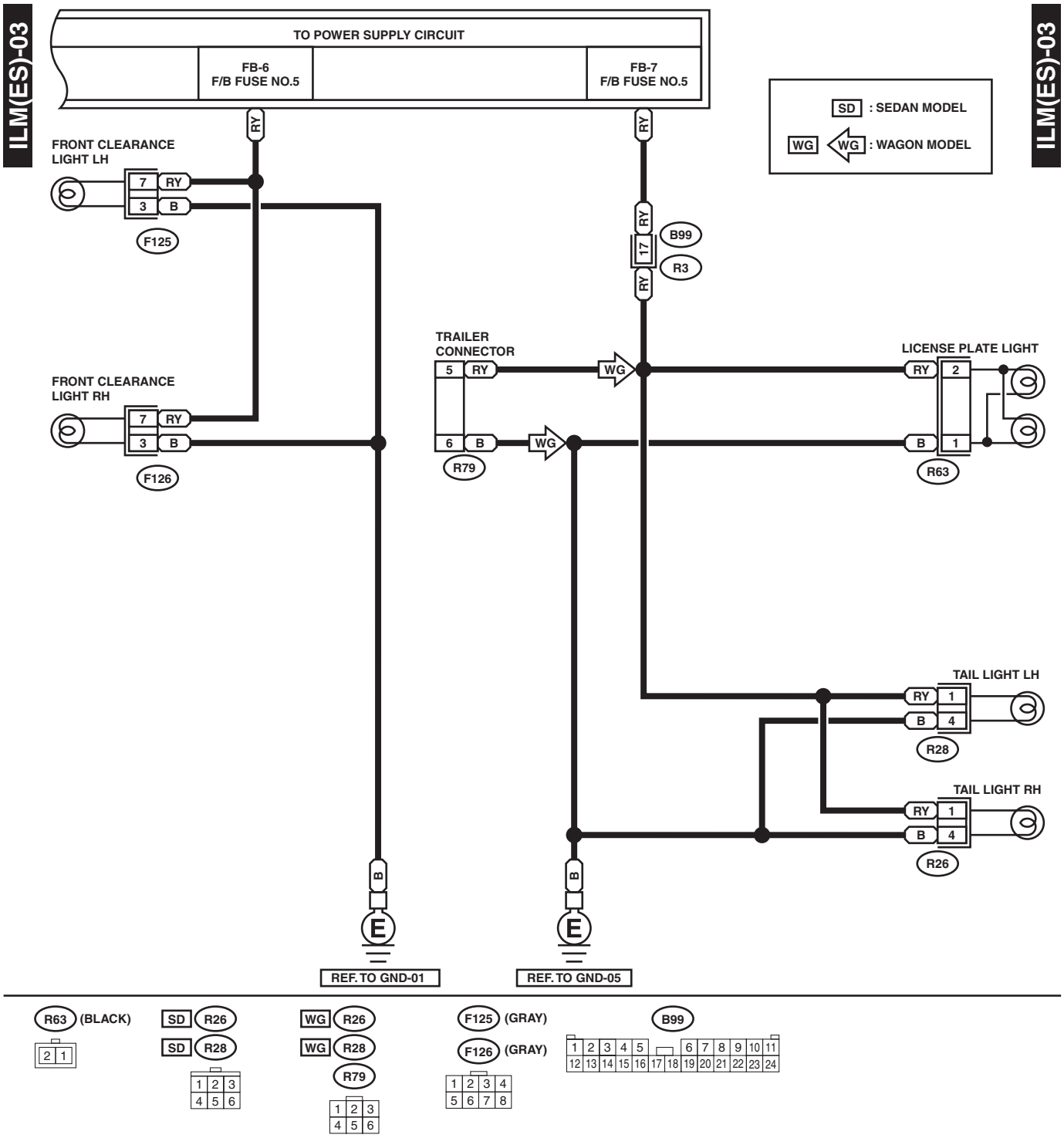
ILM(ES)-03
TO POWER SUPPLY CIRCUIT
FB-6
F/B FUSE NO.5
FB-7
F/B FUSE NO.5
SD : SEDAN MODEL
WG : WAGON MODEL
FRONT CLEARANCE LIGHT LH
F125
FRONT CLEARANCE LIGHT RH
F126
B99
R3
TRAILER CONNECTOR
R79
LICENSE PLATE LIGHT
R63
TAIL LIGHT LH
R28
TAIL LIGHT RH
R26
REF. TO GND-01
REF. TO GND-05
R63 (BLACK)
SD R26
SD R28
WG R26
WG R28
R79
F125 (GRAY)
F126 (GRAY)
B99
WI-14428

2. STI MODEL

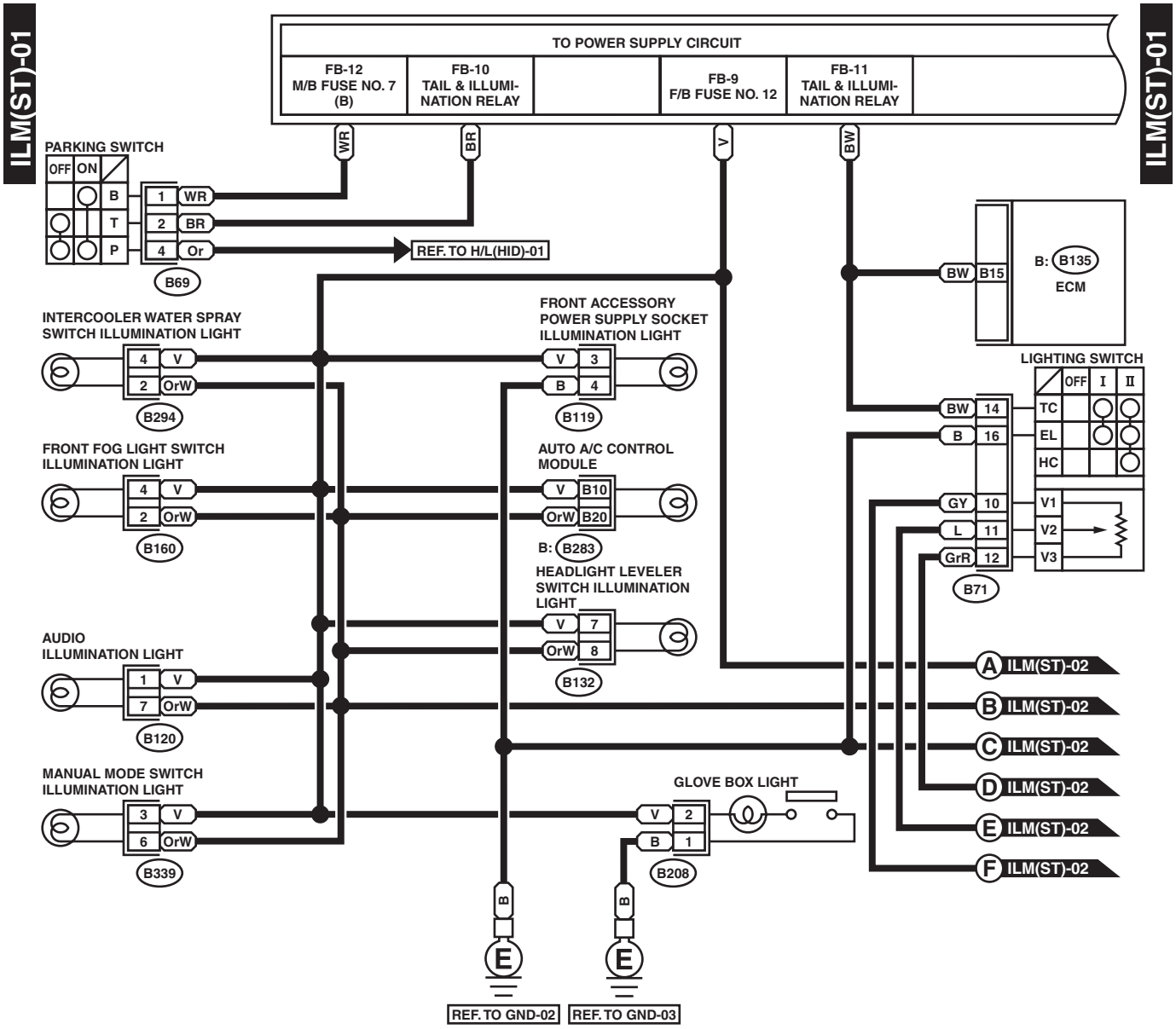
ILM(ST)-01
TO POWER SUPPLY CIRCUIT
FB-12 M/B FUSE NO. 7 (B)
FB-10 TAIL & ILLUMI-NATION RELAY
FB-9 F/B FUSE NO. 12
FB-11 TAIL & ILLUMI-NATION RELAY
PARKING SWITCH
OFF ON
B
T
P
1 WR
2 BR
4 Or
B69
REF. TO H/L(HID)-01
INTERCOOLER WATER SPRAY SWITCH ILLUMINATION LIGHT
4 V
2 OrW
B294
FRONT FOG LIGHT SWITCH ILLUMINATION LIGHT
B160
AUDIO ILLUMINATION LIGHT
1 V
7 OrW
B120
MANUAL MODE SWITCH ILLUMINATION LIGHT
3 V
6 OrW
B339
FRONT ACCESSORY POWER SUPPLY SOCKET ILLUMINATION LIGHT
V 3
B 4
B119
AUTO A/C CONTROL MODULE
V B10
OrW B20
B: B283
HEADLIGHT LEVELER SWITCH ILLUMINATION LIGHT
V 7
OrW 8
B132
GLOVE BOX LIGHT
V 2
B 1
B208
REF. TO GND-02
REF. TO GND-03
BW B15
B: B135
ECM
LIGHTING SWITCH
OFF I II
TC
EL
HC
BW 14
B 16
GY 10
L 11
GrR 12
V1
V2
V3
B71
A ILM(ST)-02
B ILM(ST)-02
C ILM(ST)-02
D ILM(ST)-02
E ILM(ST)-02
F ILM(ST)-02
B208 (BLACK)
B69
B119
B160 (GRAY)
B294
B339 (BLUE)
B132
B120
B71
B: B283 (GRAY)
B: B135
WI-14429

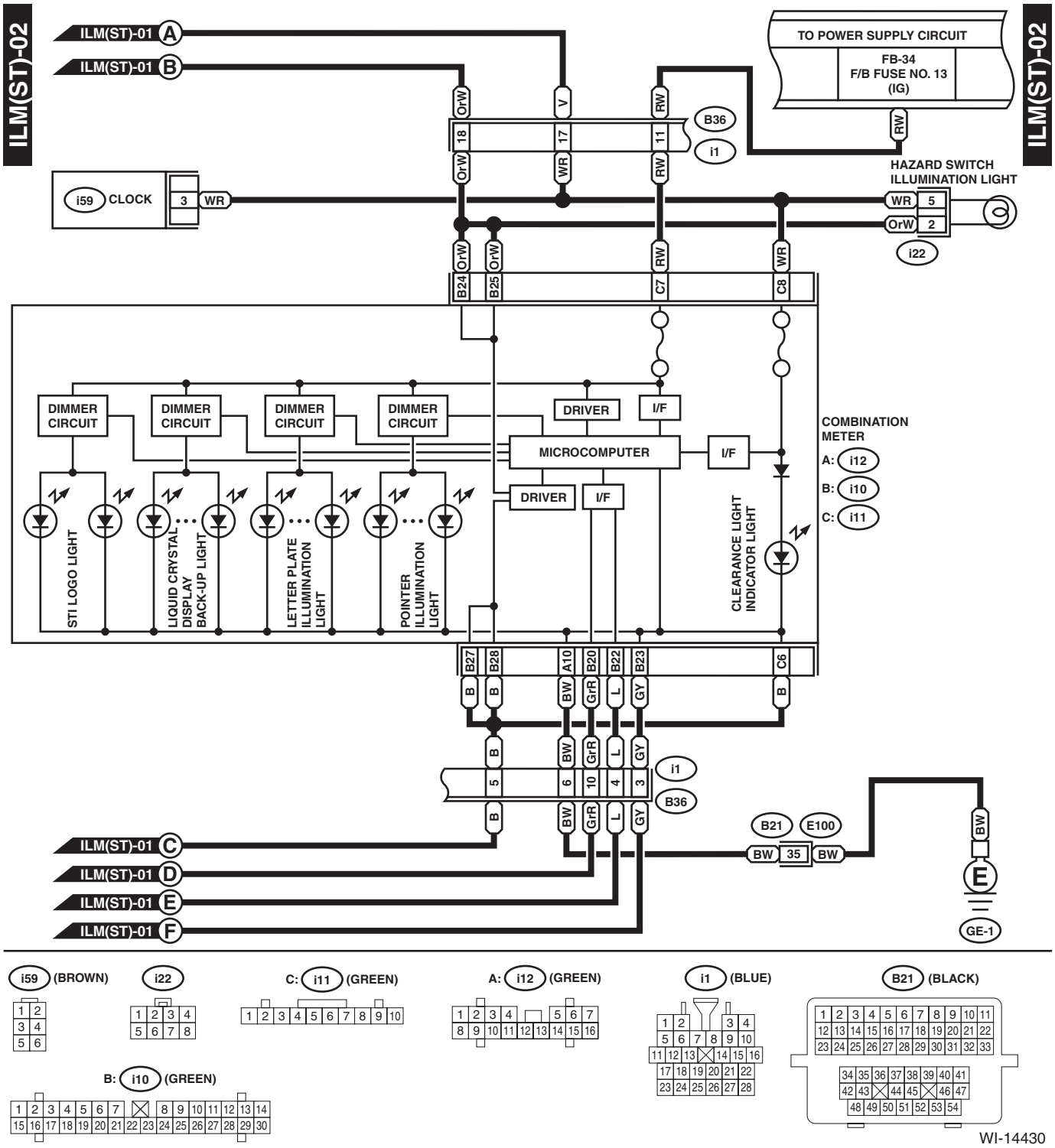
ILM(ST)-02
ILM(ST)-01 A
ILM(ST)-01 B
TO POWER SUPPLY CIRCUIT
FB-34
F/B FUSE NO. 13
(IG)
B36
i1
i59 CLOCK
HAZARD SWITCH
ILLUMINATION LIGHT
i22
DIMMER CIRCUIT
DRIVER
I/F
MICROCOMPUTER
COMBINATION METER
A: i12
B: i10
C: i11
STI LOGO LIGHT
LIQUID CRYSTAL DISPLAY BACK-UP LIGHT
LETTER PLATE ILLUMINATION LIGHT
POINTER ILLUMINATION LIGHT
CLEARANCE LIGHT INDICATOR LIGHT
B21
E100
GE-1
ILM(ST)-01 C
ILM(ST)-01 D
ILM(ST)-01 E
ILM(ST)-01 F

i59 (BROWN)
i22
C: i11 (GREEN)
A: i12 (GREEN)
i1 (BLUE)
B21 (BLACK)
B: i10 (GREEN)
WI-14430

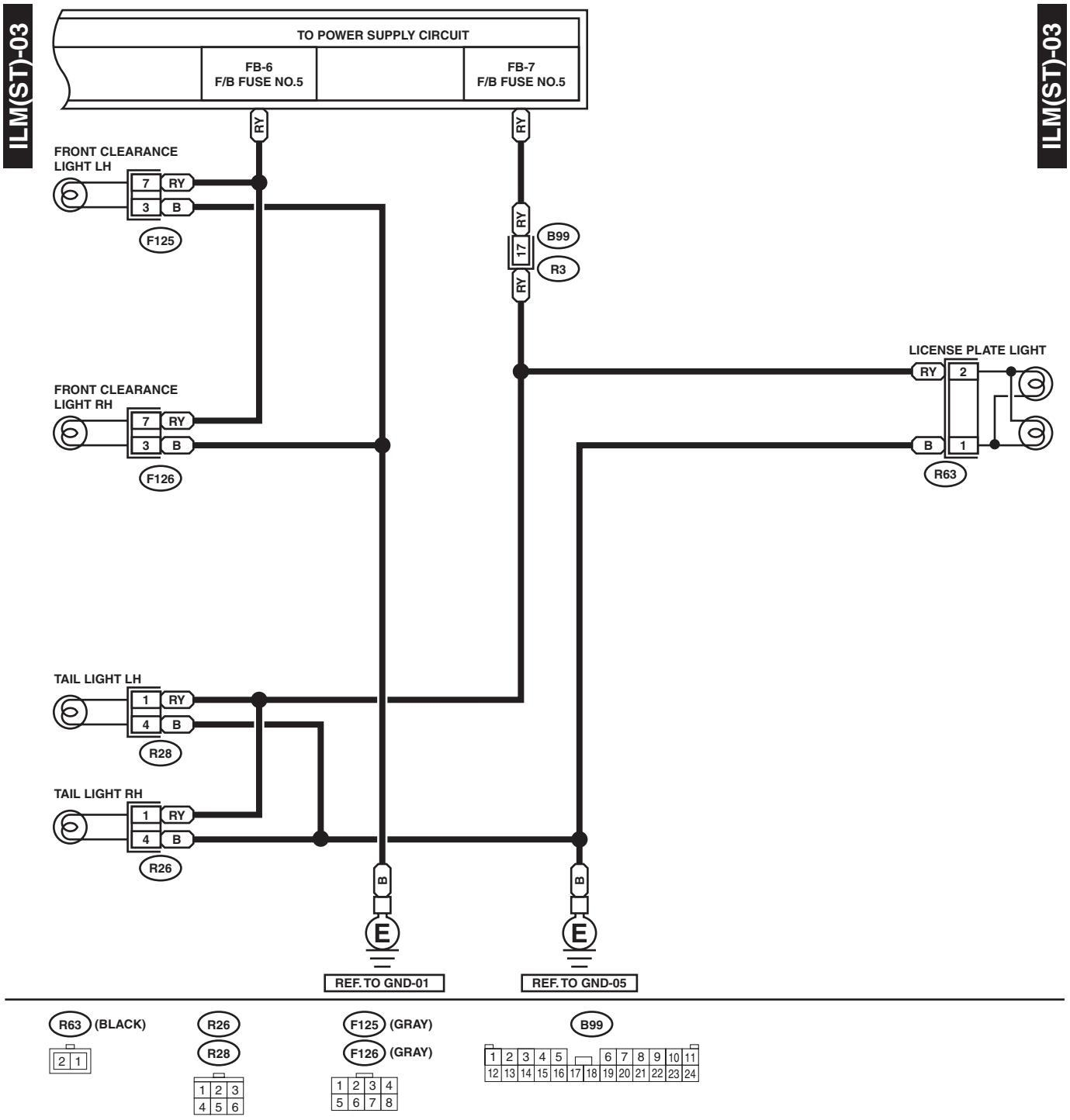
ILM(ST)-03
TO POWER SUPPLY CIRCUIT
FB-6
F/B FUSE NO.5
FB-7
F/B FUSE NO.5
RY
FRONT CLEARANCE
LIGHT LH
7
3
B
F125
17
B99
R3
LICENSE PLATE LIGHT
2
1
R63
FRONT CLEARANCE
LIGHT RH
F126
TAIL LIGHT LH
4
R28
TAIL LIGHT RH
R26
E
REF. TO GND-01
REF. TO GND-05
R63 (BLACK)
R26
R28
F125 (GRAY)
F126 (GRAY)
B99
WI-14431